Acme Sanitary Ware Co. Ltd.
Since 1949
1/F, Acme Building, 22-28 Nanking Street, Kowloon, Hong Kong
Tel: 2388 7171 Fax: 2710 8012
Email: acme@acmesanitary.com.hk
Website: www.acmesanitary.com.hk

GROHE Pure Freude an Wasser

PROJECT		REF		REV	ITEM CODE	
LOCATION		DATE			PAGE	

SANITARY WARE SPECIFICATION SHEET

Item Descriptions	GROHE (Germany) Chrome plated pneumatic push button actuation
Dimensions	L48 x W13 x H48 mm
Model	38771000
Finish / Material	Chrome Plated
Country of origin	Germany
Manufacturer	GROHE Limited
Supplier	Acme Sanitary Ware Co. Ltd Mr. Eric Wong/ Mr. Don Yuen
Contact Tel/Fax E-mail Website	(852) 2388-7171 / (852) 2710-8012 acme@acmesanitary.com.hk www.acmesanitary.com.hk

Illustration/ Drawing

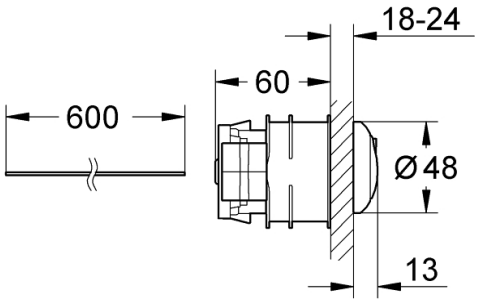

Pneumatic push button actuation

- for dual flush or start & stop actuation
- Ø 48 mm
- in combination with bath furniture
- for material thickness from 18 -24 mm
- with 600 mm air hose
- GROHE Long-Life Shine durable sparkling sheen

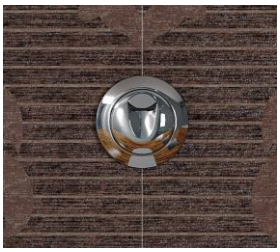

Note:

** All information of the above is for the reference only. No prior notice is made if any changes.*